V-Series 11 EER models will be out of production by June 1, 2020

V-SERIES™ HWC

FORM NO. HWC-100 (08/2019)

HWC MODEL UNITS

GAS HEATING / ELECTRIC COOLING PACKAGED UNITS

FEATURES

- Standard and High Efficiency heating
- Completely self-contained heating and cooling package
  - Microban® anti-microbial evaporator drain pan
  - No outside condensing unit
  - No external refrigerant lines
  - No separate indoor cooling coil
  - No separate venting system
- Pre-wired and pre-charged
- Individually metered and controlled
- Self-contained, replaceable, slide-out cooling chassis
- Internal vent system
- Direct vent/sealed combustion
- Freeze Shield™ condensate trap* with side or front condensate connection*
- Compatible with any 24 volt zoning system

REFRIGERANT SYSTEM

- High efficiency compressor
- Copper tubing with enhanced fin coils

HEAT EXCHANGER

- Stainless steel primary heat exchanger on all standard efficiency models
- Stainless steel primary & secondary heat exchanger and transition box standard on high efficiency models

BLOWER

- Multispeed motor for wide airflow range
- ECM blower motor in high efficiency units
- Dynamically balanced blower with resilient motor mounts for smooth and quiet operation
- Internal filter is standard

CONTROLS

- Color coded wiring for easy service
- Diagnostic LED
- Forward facing and easily accessible controls

INSTALLATION

- Plug & Play like features

WARRANTY

- 5 year limited warranty on all parts
- 20 year limited warranty on stainless steel heat exchanger

*Patent Pending

MODEL NUMBER GUIDE

H W C 9 N 55 11 P 18 A 1

H = Gas Heat

W = With

C = Electric Cooling

GAS HEAT EFFICIENCY
8 = 80% TE
9 = up to 95% TE

GAS HEAT FEATURE
N = Stainless steel heat exchanger

GAS HEATING INPUT
24 = 24,000 Btu/hr
36 = 36,000 Btu/hr
48 = 48,000 Btu/hr
60 = 60,000 Btu/hr
22 = 22,000 Btu/hr
33 = 33,000 Btu/hr
44 = 44,000 Btu/hr
55 = 55,000 Btu/hr

Revision Code

Series

NOMINAL COOLING CAPACITY
12 - 12,000 Btu/hr
18 - 18,000 Btu/hr

P = 208/230 V - 60 Hz - 1 Ph

COOLING EFFICIENCY
11 = 11 EER

ELECTRICAL AND PHYSICAL DATA

Model	Voltage/ Hz/ Phase	Voltage Range	Min. Circuit Amps	Max. Fuse/ HACR Brkr.	Compressor		Outside Fan				Indoor Blower			Refrig. Charge (oz.)	Weight (lbs.)
					Rated Load Amps	Locked Rotor Amps	Dia. (in.)	Nom. RPM	Rated Load Amps	Rated HP	Wheel Dia. x Width	Rated Load Amps	Rated HP		
HWC8N2411P12	208-230/60/1	197-253	7.5	15	4.9	27.0	18	900	1.0	1/3	10 x 4.5	0.4	1/2	43	293
HWC8N3611P12															
HWC8N3611P18			10.4	15	6.7	37.5		950	1.3			0.7		55	313
HWC8N4811P18															
HWC8N6011P18															
HWC9N2211P12	208-230/60/1	197-253	7.4	15	4.9	27.0	18	1075	0.9	1/8	10 x 4.5	0.4	1/2	49	290
HWC9N3311P12															
HWC9N3311P18			10.7	15	6.7	37.5			1.6	1/4		0.7		54	310
HWC9N4411P18															
HWC9N5511P18															

PERFORMANCE

Model	Cooling				Heating			
	Btuh	EER	S/T	CFM	Input Buth	Output Buth	Thermal Efficiency	Temp. Rise Range °F
HWC8N2411P12	11,800	11.0	0.75	430	24,000	19,000	80	25-55
HWC8N3611P12					36,000	28,500		35-65
HWC8N3611P18	17,000	11.0	0.73	540	36,000	28,500		25-55
HWC8N4811P18					48,000	38,000		35-65
HWC8N6011P18					60,000	47,500		45-75
HWC9N2211P12	11,800	11.0	0.70	400	22,000	20,500	95	25-55
HWC9N3311P12					33,000	31,000	94	35-65
HWC9N3311P18	17,000	11.0	0.74	600	33,000	31,000	94	30-60
HWC9N4411P18					44,000	41,000	94	35-65
HWC9N5511P18					55,000	51,500	93	45-75

OUTDOOR SOUND RATINGS

Model	Sound Rating (dBA)
HWC8N2411P12	74
HWC8N3611P12	
HWC8N3611P18	76
HWC8N4811P18	
HWC8N6011P18	
HWC9N2211P12	76
HWC9N3311P12	
HWC9N3311P18	80
HWC9N4411P18A	
HWC9N5511P18A	

ACCESSORIES

Description	Kit #	Where Used
LP KIT (0 - 4,500 FT)	ALPKT842	HWC8 Only
HI Altitude Kit (NAT 4,500 - 8,000 ft)	AHAKT01	
Decorative External Louver Clear Anod. Al	ALVR42	
Decorative External Louver Custom Painted	ALVR42P	
LP KIT (0 - 4,500 FT)	ALPKT843	HWC9 Only
HI Altitude Kit (NAT 4,500 - 8,000 ft)	AHAKT02	
Decorative External Louver Clear Anod. Al	ALVR43	
Decorative External Louver Custom Painted	ALVR43P	
Condensate Neutralizer Cartridge	CC172	
Wall Sleeve	CA239	All HWC's

COOLING PERFORMANCE EXTENDED RATINGS

Model	Indoor Temp DB/WB °F	Outdoor Temperature - DB °F														
		65			85			95			105			115		
		Btuh	S/T	kW	Btuh	S/T	kW	Btuh	S/T	kW	Btuh	S/T	kW	Btuh	S/T	kW
HWC8N24/3611P12A	85/72	16600	0.63	0.82	15000	0.66	0.98	13400	0.7	1.13	12200	0.72	1.25	11000	0.73	1.37
	80/67	15500	0.67	0.82	14000	0.71	0.97	12400	0.75	1.12	10800	0.82	1.24	9100	0.88	1.36
	75/63	14400	0.72	0.82	13000	0.75	0.98	11700	0.78	1.13	10300	0.84	1.23	8800	0.89	1.33
	75/57	13000	1	0.85	12000	1	0.99	10900	1	1.13	9600	1	1.25	8300	1	1.37
HWC8N36/48/6011P18A	85/72	21400	0.6	1.13	19800	0.64	1.33	18200	0.67	1.53	16900	0.69	1.665	15600	0.71	1.8
	80/67	20100	0.66	1.14	18600	0.7	1.325	17000	0.73	1.51	15500	0.77	1.65	14000	0.8	1.79
	75/63	19100	0.7	1.14	17600	0.73	1.325	16100	0.75	1.51	14200	0.8	1.64	12300	0.84	1.77
	75/57	17200	0.95	1.12	16100	0.98	1.31	14900	1	1.5	13300	1	1.62	11600	1	1.74
HWC9N22/3311P12A	85/72	17200	0.57	0.93	16100	0.6	1.07	14900	0.62	1.21	14000	0.64	1.33	13000	0.66	1.44
	80/67	16100	0.65	0.93	14600	0.68	1.06	13000	0.7	1.18	12400	0.73	1.3	11700	0.75	1.42
	75/63	15100	0.68	0.93	14000	0.71	1.06	12800	0.73	1.19	11600	0.77	1.3	10300	0.81	1.4
	75/57	12400	1	0.91	12000	1	1.05	11600	0.99	1.18	11200	0.98	1.32	9700	0.97	1.45
HWC9N33/44/5511P18A	85/72	24000	0.58	1.31	22100	0.6	1.49	20100	0.62	1.67	18500	0.65	1.81	16900	0.67	1.95
	80/67	22200	0.65	1.31	20300	0.69	1.49	18400	0.72	1.66	16900	0.75	1.8	15300	0.77	1.93
	75/63	20600	0.7	1.31	18800	0.73	1.48	17000	0.75	1.64	15500	0.79	1.78	14000	0.82	1.91
	75/57	18000	1	1.3	16700	1	1.47	15300	1	1.63	14000	1	1.76	12700	1	1.89

HWC8 BLOWER PERFORMANCE

Airflows and Heating Temperature Rises as a Function of External Static Pressure												
Model	Rise Range (°F)	Mid Rise (°F)	Indoor Blower Speed	Unit Voltage (V)	0.1“ w.c.		0.2“ w.c.		0.3“ w.c.		0.4“ w.c.	
					SCFM	Temp Rise (°F)	SCFM	Temp Rise (°F)	SCFM	Temp Rise (°F)	SCFM	Temp Rise (°F)
HWC8N2411P12A	25 - 55	40	**TAP 1 (HEAT) ***	**208 or 230**	**445**	**40**	**410**	**44**	**380**	**47**	**345**	**52**
			TAP 2 (HEAT)	208 or 230	535	34	505	36	475	38	445	40
			TAP 3 (HEAT)	208 or 230	605	30	580	31	550	33	530	34
			TAP 4 (COOL)	208 or 230	405		370		335		300	
			TAP 5 (COOL)	208 or 230	455		425		390		360	
HWC8N3611P12A	35 - 65	50	TAP 1 (HEAT)	208 or 230	445	61	410	N/A	380	N/A	345	N/A
			TAP 2 (HEAT) *	208 or 230	535	50	505	53	475	57	445	61
			TAP 3 (HEAT)	**208 or 230**	**605**	**45**	**580**	**47**	**550**	**49**	**530**	**51**
			TAP 4 (COOL)	208 or 230	405		370		335		300	
			TAP 5 (COOL)	208 or 230	455		425		390		360	
HWC8N3611P18A	30 - 60	45	**TAP 1 (HEAT) ***	**208 or 230**	**665**	**41**	**640**	**42**	**615**	**44**	**590**	**46**
			TAP 2 (HEAT)	208 or 230	750	36	725	37	700	39	680	40
			TAP 3 (HEAT)	208 or 230	800	34	780	35	760	36	740	36
			TAP 4 (COOL)	208 or 230	540		510		485		460	
			TAP 5 (COOL)	208 or 230	590		560		535		510	
HWC8N4811P18A	35 - 65	50	TAP 1 (HEAT)	208 or 230	665	54	640	56	615	59	590	N/A
			TAP 2 (HEAT) *	**208 or 230**	**750**	**48**	**725**	**50**	**700**	**51**	**680**	**53**
			TAP 3 (HEAT)	208 or 230	800	45	780	46	760	47	740	49
			TAP 4 (COOL)	208 or 230	540		510		485		460	
			TAP 5 (COOL)	208 or 230	590		560		535		510	
HWC8N6011P18A	45 - 75	60	TAP 1 (HEAT)	208 or 230	665	68	640	70	615	N/A	590	N/A
			TAP 2 (HEAT)	208 or 230	750	60	725	62	700	64	680	66
			TAP 3 (HEAT) *	**208 or 230**	**800**	**56**	**780**	**58**	**760**	**59**	**740**	**61**
			TAP 4 (COOL)	208 or 230	540		510		485		460	
			TAP 5 (COOL)	208 or 230	590		560		535		510	

N/A: Do not operate unit in heating mode using this blower speed at this external static pressure. Outside of temperature rise range.
* As shipped speed for heating operation
† : As shipped speed for cooling operation

HWC9 BLOWER PERFORMANCE

Airflows and Heating Temperature Rises as a Function of External Static Pressure												
Model	Rise Range (°F)	Mid Rise (°F)	Indoor Blower Speed	Unit Voltage (V)	0.1" w.c.		0.2" w.c.		0.3" w.c.		0.4" w.c.	
					SCFM	Temp Rise (°F)	SCFM	Temp Rise (°F)	SCFM	Temp Rise (°F)	SCFM	Temp Rise (°F)
HWC9N2211P12	25 - 55	40	**TAP 1 (HEAT) ***	**208 or 230**	**455**	**42**	**415**	**46**	**385**	**50**	**355**	**54**
			TAP 2 (HEAT)	208 or 230	570	34	540	36	510	38	485	40
			TAP 3 (HEAT)	208 or 230	655	29	625	31	595	32	575	33
			TAP 4 (COOL)†	208 or 230	410		370		340		305	
			TAP 5 (COOL)	208 or 230	455		415		385		355	
HWC9N3311P12	35 - 65	50	TAP 1 (HEAT)	208 or 230	455	63	415	N/A	385	N/A	355	N/A
			TAP 2 (HEAT) *	**208 or 230**	**570**	**50**	**540**	**53**	**510**	**56**	**485**	**59**
			TAP 3 (HEAT)	208 or 230	655	44	625	46	595	48	575	50
			TAP 4 (COOL)†	208 or 230	410		370		340		305	
			TAP 5 (COOL)	208 or 230	455		415		385		355	
HWC9N3311P18	30 - 60	45	**TAP 1 (HEAT) ***	**208 or 230**	**630**	**45**	**600**	**48**	**570**	**50**	**550**	**52**
			TAP 2 (HEAT)	208 or 230	770	37	740	39	715	40	690	42
			TAP 3 (HEAT)	208 or 230	885	32	855	34	830	35	810	35
			TAP 4 (COOL)†	208 or 230	605		575		545		520	
			TAP 5 (COOL)	208 or 230	650		615		585		555	
HWC9N4411P18	35 - 65	50	TAP 1 (HEAT)	208 or 230	630	61	600	64	570	N/A	550	N/A
			TAP 2 (HEAT) *	**208 or 230**	**770**	**50**	**740**	**52**	**715**	**54**	**690**	**56**
			TAP 3 (HEAT)	208 or 230	885	43	855	45	830	46	810	47
			TAP 4 (COOL)†	208 or 230	605		575		545		520	
			TAP 5 (COOL)	208 or 230	650		615		585		555	
HWC9N5511P18	45 - 75	60	TAP 1 (HEAT)	208 or 230	630	N/A	600	N/A	570	N/A	550	N/A
			TAP 2 (HEAT)	208 or 230	770	61	740	64	715	66	690	68
			TAP 3 (HEAT) *	**208 or 230**	**885**	**53**	**855**	**55**	**830**	**57**	**810**	**58**
			TAP 4 (COOL)†	208 or 230	605		575		545		520	
			TAP 5 (COOL)	208 or 230	650		615		585		555	

N/A: Do not operate unit in heating mode using this blower speed at this external static pressure. Outside of temperature rise range.

* As shipped speed for heating operation

UNIT DIMENSIONS

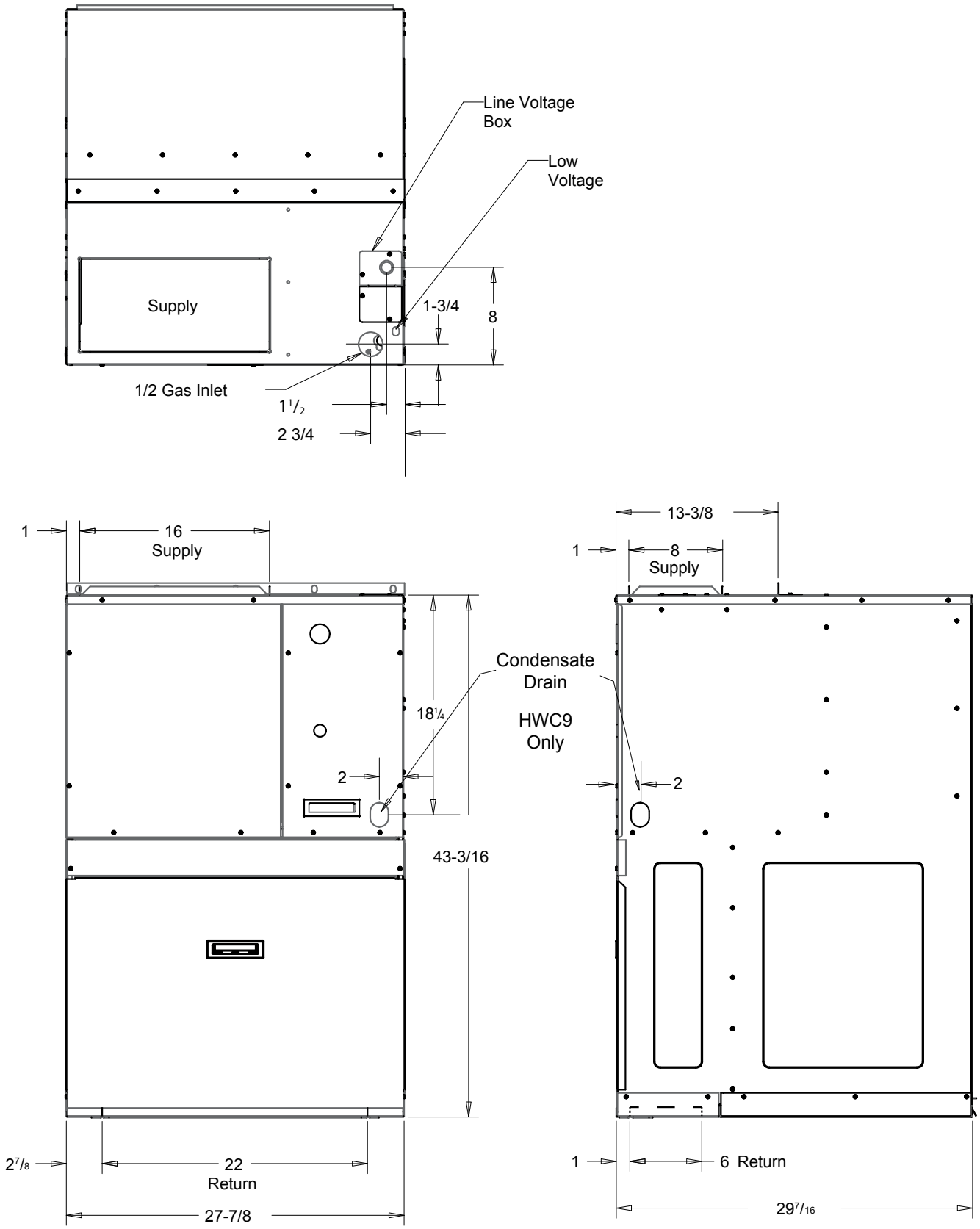

WALL SLEEVE DIMENSIONS

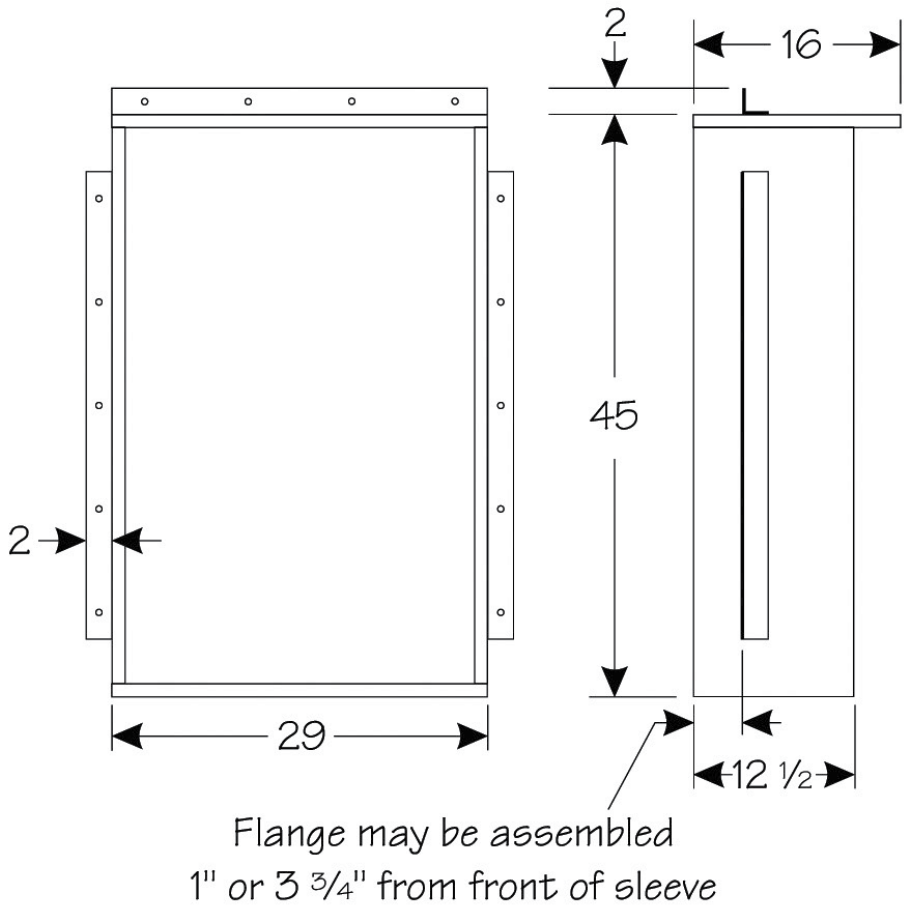

magic-pak®
215 Metropolitan Drive | West Columbia, SC 29170
800-448-5872
Product Support 866-282-7257

All specifications and illustrations subject to change without notice and without incurring obligations.

© 2019 Allied Air Enterprises LLC, a Lennox International Inc. Company